Aeroelastic analysis of versatile thermal insulation (VTI) panels with pinched boundary conditions

Article · March 2014

DOI: 10.1007/s12567-013-0054-5

Erasmo Carrera
Politecnico di Torino

Enrico Zappino
Politecnico di Torino

Martin Komarek
L. K. Engineering, s.r.o.

Richard Schwane
European Space Agency

CEAS Space Journal manuscript No.
(will be inserted by the editor)

Aeroelastic analysis of Versatile Thermal Insulation (VTI) panels with pinched boundary conditions.

Erasmo Carrera · Enrico Zappino · Karel Patočka · Martin Komarek · Adriano Ferrarese · Mauro Montabone · Bernhard Kotzias · Brian Huermann · Richard Schwane

Received: date / Accepted: date

Abstract Launch vehicles design and analysis is a crucial problem in space engineering. The large range of external conditions and the complexity of space vehicles makes the solution of the problem really challenging. The problem considered in the present work deals with the Versatile Thermal Insulation (VTI) panel. This thermal protection system is designed to reduce heat fluxes on the LH2 tank during the long coasting phases. Because of the unconventional boundary conditions and the large-scale geometry of the panel, the aeroelastic behaviour of Versatile Thermal Insulation (VTI) is investigated in the present work. Known available results from literature related to similar problem, are reviewed by considering the effect of various Mach regimes, including boundary layers thickness effects, in-plane mechanical and thermal loads, non-linear effects and amplitude of limit cycle oscillations (LCO). A dedicated finite element model is developed for the supersonic regime. The models used for coupling the orthotropic layered structural model with Piston Theory aerodynamic models allows the calculations of flutter conditions in case of curved panels supported in a discrete number of points. An advanced Computational Aeroelasticity (CA) tool is developed by using various dedicated commercial software (CFX, ZAERO, EDGE). A Wind Tunnel (WT) test campaign is carried out in order to assess the computational tool in the analysis of this type of problem.

Keywords Thermal insulations · Panel stability · Panel flutter · Launchers

Erasmo Carrera (PoliTO)
E-mail: erasmo.carrera@polito.it

Enrico Zappino (PoliTO)
C.so Duca degli Abruzzi 24, 10029, Turin, Italy
Tel.: +39 011 0906869
Fax: +39 011 0906899
E-mail: enrico.zappino@polito.it

Karel Patočka (VZLU)
E-mail: patocka@vzlu.cz

Martin Komarek (LKE)
E-mail: komarek@lke.cz

Adriano Ferrarese (TAS-I)
E-mail: Adriano.Ferrarese@thalesaleniaspace.com

Mauro Montabone (TAS-I)
E-mail: Mauro.Montabone@thalesaleniaspace.com

Bernhard Kotzias (EADS Astrium)
E-mail: Bernhard.Kotzias@astrium.eads.net

Brian Huermann (EADS Astrium)
E-mail: Brian.Huermann@astrium.eads.net

Richard Schwane (ESA)
E-mail: Richard.Schwane@esa.int

Abbreviations

AERM	Aeroelastic Model
AM	Active Model
BL	Boundary layer
BLM	Base Line Model
CA	Computational Aeroelasticity
CFD	Computationa Fluid Dynamics
CUF	Carrea Unified Formulation
CUST	Cryogenic Upper Stage Technology
ESA	European Space Agency
FEM	Finite Elements Method
FLPP	Future Launchers Preparatory Program
LCO	Limit Cycle Oscillation
RM	Rigid Model
SMF	Stability Margin Factor
VTI	Versatile Thermal Insulation
WT	Wind Tunnel

List of Symbols

a	m	Panel length
b	m	Panel width
Cp	$-$	Pressure Coefficient
δ	m	Boundary layer thickness
ΔT	K	Differential temperature across the panel
Δp	Pa	Differential pressure across the panel
$E11$	Pa	Longitudinal Young's modulus
$E22$	Pa	Trasversal Young's modulus
f_f	Hz	Flutter frequency
F_{tau}	$-$	Cross-section Expansion function
h_f	m	LCO amplitude
λ	$-$	Critical Flutter Parameter
M	$-$	Mach Number
p	Pa	Pressure
P_{cr}	N	In plane stress load
q	Pa	Dynamic pressure
q_f	Pa	Dynamic pressure at flutter condition
R	m	Curvature radius
s	m	Displacements vector
ρ	kg/m^3	Density
t	m	Panel thickness
V	m/s	Velocity
u, v, w	m	Displacements in x,y,z respectively

1 Introduction

Launch vehicle design and analysis is a crucial problem in space engineering. The large range of external conditions and the complexity of space vehicles make the solution of the problem really challenging.

In the frame of the Cryogenic Upper Stage Technologies (CUST) development program, part of the ESA Future Launcher Preparatory Program (FLPP), the use of Versatile Thermal Insulation (VTI) panels has been proposed to protect the cryogenic tanks during the very early stage of the launcher flight (Montabone and Tosi, 2011).

VTI panels are attached at the upper stage of the launcher for some seconds and then released by means of pyrotechnical separation nuts. The competitiveness of the VTI solution with respect to existing upper stage structures in use must be checked carefully in order to make a proper decision for use in future launcher.

In particular the success of the VTI panel solution is very much subordinated to its weight. The panels should be as light as possible but at the same time they must survive the loads acting on them during flight. Among the various loads acting on the panels particular attention is paid to fluid structure interaction coupling sensitive loads focusing on aero-elastic analyses and in particular on panel-flutter phenomena.

Panel flutter may appear during different Mach regimes. In the subsonic regime it is called low frequency panel flutter and it appears as a divergence phenomenon. In the transonic and low supersonic range it appears as a single mode flutter (Vedeneev, 2012); due to the flow non-linearities it is mandatory to approach this problem with a refined aerodynamic model such as the Navier-Stokes model (Hashimoto et al, 2009). In the supersonic regimes panel flutter appears as coupled mode flutter (Dowell, 1970); due to the aerodynamic loads two frequencies become closer and closer, when coalescence occurs usually the damping becomes positive and the flutter appears.

During the last fifty years many investigations on panel flutter were proposed. Many efforts have been made during the sixties in order to develop a first approach to the problem. Some reviews were presented by Dowell (1970), Fung (1960) and Johns (1965). In these works some elementary approaches were proposed based on classical plate theory and on supersonic linear aerodynamic models like piston theory (Ashley and Zartarian, 1956). The results concern simple geometry and simple boundary conditions (simply supported or clamped) along with analytical solutions available at that time.

Further improvements on these research activities were presented in the following years in order to extend the analyses to different geometries. Ganapathi (1995) gave some results taking curvature into account; skew panels were analysed by Kariappa et al (1970) who also considered the yawed angle of the flow. A comprehensive analysis of composite panels was presented by Dixon and Mei (1993) which introduced the effects of the orthotropy.

In recent years some new developments have been proposed in order to overcome the problem related to piston theory which ensure a good accuracy only for Mach numbers greater than 1.5. Gordiner and Visbal (2002) used a 3D viscid aerodynamic model coupled with a nonlinear structural model to study the transonic behaviour of the panel flutter, also taking into account the effects of the boundary layer. In the work by Hashimoto et al (2009) the effects of the boundary layer (BL) have been studied comparing the results from CFD analysis with those from a shear flow model proposed by Dowell (1973).

Despite the number of works that have been presented on panel flutter, problems such as transonic analysis, boundary layer effects and 'non standard' bound-

ary conditions have not been developed in all their features although these are critical in the design process.

The aim of the activity performed in this project is to clarify whether aeroelastic loads should be considered in VTI design. If the effects of the aeroelastic loads are not negligible it is important to investigate whether they are critical or not.

2 VTI design approach

The mission profile of the VTI panel makes this structure subject to many different loads. The aim of the present activity is to answer to the question:

1. Are the aeroelastic loads negligible in the VTI panel design?
2. If not, are we able to predict if these loads are critical?

The activities devoted to answer these questions have been split in 3 different *Levels*. The firsts 2 *Levels* were devoted to answer the first question by means of literature review and some preliminary analyses in the supersonic regime. The third *Level* had to answer the second question. A more accurate computational approach has been used and some WT tests have been performed to assess the computational tool. In Figure 1 is depicted the work-flow of the design process.

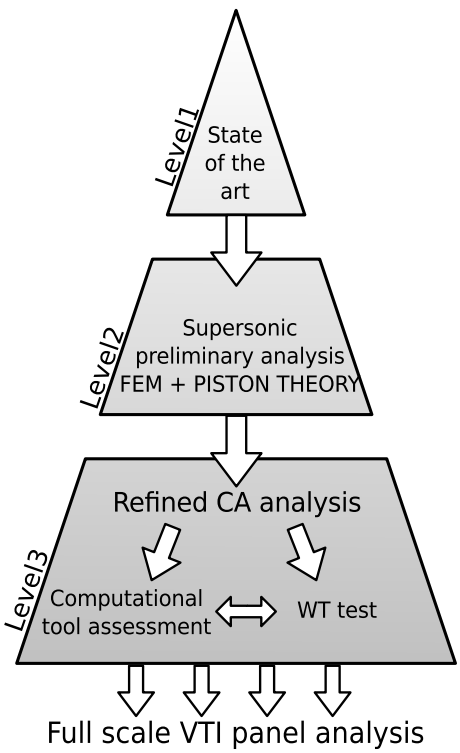

Fig. 1 VTI Panel aeroelastic design workflow

The approach used in the three level is reported in the following section.

2.1 Phase 1: State of the art

Because of the complexity of the structure considered and the multidisciplinary of the problem to solve, the first activity performed in the present work is a large review of the remarkable results found in literature related to panel flutter. Many parameter have been considered in order to investigate their effects on flutter boundaries.

The literature overview has been focused on:

- Identification of the aeroelastic phenomena at different Mach number
- Effect of the panel configuration (load, BC) on the aeroelastic instabilities
- Available computational approach

In Table 1 the possible aeroelastic instabilities that could arise at the different Mach numbers are reported. In the subsonic regimes the panels show static divergence. In the transonic regime the singular mode flutter can appear as shown by Vedeneev (2012), in this Mach range the non-linearity of the flow and the viscosity dominate the aeroelastic phenomena. In the supersonic range usually the classical coupled mode flutter appears.

In order to perform accurate aeroelastic analysis it is important to use an appropriate computational model. In Table 2, proposed by McNamara and Friedmann (2007), all possible approaches that can be adopted in the aeroelastic solution are reported. The structural model should be considered non-linear if the LCO has to be evaluated. Complex aerodynamic theory should be used in the transonic regimes while, in the hypersonic range, the non-linearities of the flow can't be neglected.

In Table 3 the effects of some panel parameters on the aeroelastic instabilities are reported. In the first column the parameters investigated are given, the increasing of these parameters could have strong effects on the behaviour of the flutter flow parameter (q_f), on the flutter frequency (f_f) and on the LCO amplitude (h_f/t). The up arrow means increasing while the down arrow means decrease, the empty space means that no information was found in literature. As an example, the increase of the curvature radius, R, increases the flutter frequency, f_f, while it decreases the critical dynamic pressure, q_f.

The literature review suggests the following considerations:

Critical factor	Aeroelastic phenomena
$0 < M < 0.7$	
Subsonic aerodynamics; Static pressure differential across the panel; Shear stress due to the high density.	Static divergence
$0.7 < M < 1.0$	
Transonic aerodynamics; In plane thermal stress; Shock wave; Static pressure differential across the panel; Boundary layer and flow separation.	Static divergence
$1.0 < M < 1.2$	
Transonic aerodynamics; In plane thermal stress; Static pressure differential across the panel; Boundary layer and flow separation.	Single degree of freedom flutter
$M > 1.2$	
Supersonic aerodynamics; In plane thermal stress; Static pressure differential across the panel; Boundary layer effects.	Coupled mode flutter

Table 1 Possible aeroelastic phenomena during the VTI-panel mission profile.

- The choice of the aerodynamic model is crucial in order to describe properly the whole physical phenomena;
- The transonic range is the most critical range in which aeroelastic phenomena may occur;
- The effects of the boundary layer are not negligible and they have a strong influence on the flutter boundary, as consequence a refined aerodynamic model is requested, specially in the transonic and low supersonic regimes.

2.2 Phase 2: Supersonic Preliminary analysis

In phase two some preliminary analyses in the supersonic range have been performed by using a Finite Element (FE) approach. The structural model and the aerodynamic model are briefly introduced in this section. The system of reference and the dimensions of the structure are shown in Figure 2.

Mach range	Structural Model	Aerodynamic Model
$\sqrt{2} < M < 5$	Linear	Linear Piston Theory
$1 < M < 5$	Linear	Linearized Potential flow
$\sqrt{2} < M < 5$	Non-Linear	Linear Piston Theory
$1 < M < 5$	Non-Linear	Linearized Potential flow
$M > 5$	Non-Linear	Non-linear Piston Theory
$0 < M < \infty$	Non-Linear	Euler or Navier-Stokes

Table 2 Models available for the aeroelastic analysis

Param.	q_f	f_f	h_f/t	References
a/b	$\uparrow$	$\uparrow$	$\downarrow$	Dowell (1970)
R	$\downarrow$	$\uparrow$		Ganapathi (1995); Dowell (1970)
$\frac{E_{11}}{E_{22}}$	$\uparrow$	$\uparrow$	$\downarrow$	Shiau and Lu (1992); Dixon and Mei (1993); Kouchakzadeh et al (2010)
Δp	$\uparrow$			Dowell (1970)
ΔT	$\downarrow$		$\uparrow$	Xue and Cheung (1993); Lee et al (1999)
P_{cr}	$\downarrow$		$\uparrow$	Kariappa et al (1970); Dowell (1970)
δ	$\uparrow$	$\uparrow$	$\downarrow$	Gordiner and Visbal (2002);Hashimoto et al (2009); Dowell (1973)

Table 3 Panel flutter parameter influence

The structural model introduced in this work is based on the Carrera Unified Formulation (CUF).
This section describes briefly the formulation in order to highlight the main features of the model from the mathematical point of view. A more comprehensive description may be found in the work by Carrera and Giunta (2010); Carrera et al (2010).

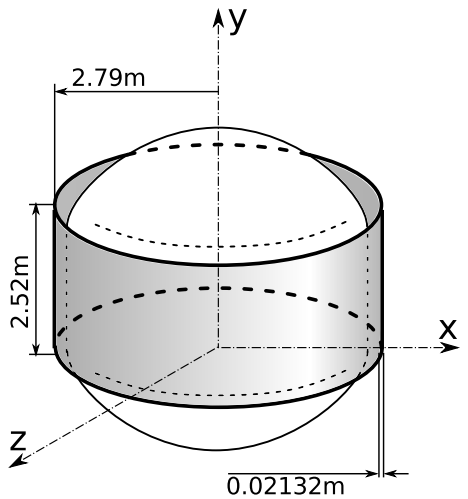

Fig. 2 Structure dimensions and system of reference

Considering a three dimensional body it is possible to define a generic displacement field in the form:

$$s\left(x,y,z;t\right)=\left\{\begin{array}{c} u_x\left(x,y,z;t\right) \\ u_y\left(x,y,z;t\right) \\ u_z\left(x,y,z;t\right) \end{array}\right\} \tag{1}$$

In the Carrera Unified Formulation frameworks the displacement field is assumed to be the product of the cross section-deformation (approximate by a function expansion, F_τ) and the axial (y-direction) displacement, this assumption is summarized in the formulation:

$$\mathbf{s}\left(x,y,z;t\right)=F_\tau(x,z)\mathbf{s}_\tau(y,t), \quad \tau=1,2,....,J \tag{2}$$

where J stands for the number of terms of the expansion. The structural model is considered linear both for geometry and for materials behaviour.

As first approach in the VTI-panel aeroelastic analysis a linear quasi-static flow model has been chosen, in particular in the present work is used the model introduced by Lightill (1953) and Ashley and Zartarian (1956) called *piston theory*.
The piston theory has been widely employed in the panel flutter analyses because of its simple formulation and its good accuracy in the supersonic flow. Despite this, it is important to underline the lacks of the piston theory formulation:

- it can't detect single mode panel flutter and divergence;
- it provides a good accuracy only for M greater than 1.5;
- it considers a inviscid linear flow, so boundary layer effects are not considered.

The piston theory assumes the flow on a panel to be similar to an one-dimensional flow in channel (in a piston). Generally speaking the pressure acting on the panel may be expressed in the form reported in Eq. 3.

$$\Delta p(y,t)=\frac{2q}{\sqrt{M^2-1}}\left\{\frac{\partial w}{\partial y}+\frac{M-2}{M-1}\frac{1}{V}\frac{\partial w}{\partial t}\right\} \tag{3}$$

The complete derivation of this formulation can be found in the work by Van Dyke (1952), Lightill (1953). Eq. 3 shows that the local pressure is function of the velocity (V), the Mach number (M), of the normal displacement (w) and of the slope of the surface ($\partial w/\partial y$).
The aeroelastic model can be expressed, in the frequency domain, using the formulation:

$$\left([\boldsymbol{K}]+[\boldsymbol{K}_a]\right)+\left([\boldsymbol{D}_a]\right)i\omega-\left([\boldsymbol{M}]\right)\omega^2=0 \tag{4}$$

The roots of this quadratic eigenvalues problem were used to investigate the aeroelastic instabilities.

2.3 Phase 3: Advanced Computational Aeroelasticity (CA) approach description

An advanced computational analysis activity has been planned in order to investigate the flutter boundary of the full scale model. This activity has an important role in the VTI panel design because, due to the complexity of the configuration and the geometry of the real VTI panel, it was not possible to build a scaled model representative of the panel to be tested in the WT.

In order to increase the confidence in the computational tool reliability two different approaches have been adopted to provide a results cross-check.

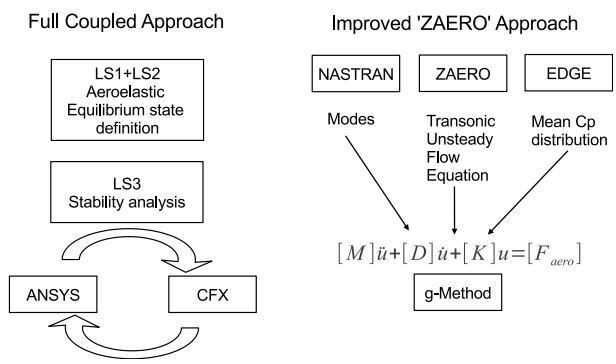

Fig. 3 LKE approach VS VZLU approach

In Figure 3 the two different approaches are depicted.

The approach by LKE considers a fully coupled FSI approach. The structural solution is provided by the commercial FE code ANSYS®, the flow solution is provided by the CFD code CFX®. The aeroelastic solution is investigated in 3 different steps:

- LS1: In the first step the flow field is evaluated at the given M number in its steady condition, the structure is considered rigid.
- LS2: In the second step the equilibrium condition considering the flexible structure is investigated. The effects of the external load are introduced in this step.
- LS3: In the third step the equilibrium condition evaluated in the LS2 is perturbed and the stability is investigated.

This solution is computed in the time domain.

The approach used by VZLU is based on the ZAERO® commercial code. This code has been developed only for aeroelastic analysis. As depicted in Figure 3 the code uses input from different programs:

- ZAERO®: the code manages the aeroelastic solution. The code, using advanced aerodynamic theory based on potential flow, is able to predict the flow perturbation (ΔCp) around a steady condition.
- EDGE®: is a CFD solver, the code is used to evaluate the mean Cp distribution in the steady condition.
- NASTRAN®: is an FE code used to evaluate the dynamic properties of the structures: modes, frequencies, modal masses.

The information from NASTRAN and EDGE are used by ZAERO to evaluate the aerodynamics coefficients collected in the aerodynamic matrices. The solution is computed in the frequency domain by means of the $g - method$ (Chen, 2000).

2.4 Phase 3: Wind tunnel (WT) test

Because of the huge dimension of the VTI-panel it was not possible to test the full-scale panel in the WT facilities provided by VZLU.

The scaling of the model introduces several approximations and in order have reliable WT results a scale of 1/60 had to be applied at the VTI model, the final dimension of the model did not allow it to be representative of the real panel. Because of that the WT test campaign was devoted to provide reliable results for the assessment of the computational tool. In particular the attentions was focused on the boundary condition configuration, and the unsteady aerodynamics around an half-cylinder geometry.

The wind tunnel configuration is shown in Figure 4.

The WT test was performed considering four models:

- 1/2 Cylinder Rigid Model (RM)
- 1/2 Cylinder Active model (AM)
- 1/8 Cylinder Rigid Model (RM)
- 1/8 Cylinder Aeroelastic model (AERM)

The preliminary tests was devoted to the assessment of the fluid field. Two Rigid Models (RM) were build: the first with a 1/2 cylinder geometry (1/2 RM), the second with a 1/8 cylinder geometry (1/8 RM). The models was used to evaluate the quality of the flow over the panel and the noise level of the WT facility.

The 1/2 AM was focused on the FSI approach assessment. The restrictions due to the dimension of the WT facilities did not allow to build a 1/2 cylinder Aeroelastic Model, so the 1/2 Active model was an alternative to the aeroelastic one to assess the unsteady aerodynamics model considering the 1/2 cylinder configuration. The flexible model was activated by an actuator put on the bottom of the panel, the oscillations of the panel created some perturbations on the flow field, The test aims to predict numerically these perturbations by means of the unsteady aerodynamics model used in the FSI solution.

The 1/8 AERM model was devoted to the flutter analysis assessment considering a reliable configuration (4 pinched corner).

Beside the aeroelastic results, the WT test was devoted to the acoustical characterization of the WT facilities in order to avoid interference between aeroelastic and aeroacoustic phenomena.

3 Results

In this section a selection of the results coming from phase two and three is reported.

3.1 Panel geometry

The VTI panels are a part of a larger structure which acts as thermal protection of an internal tank. The characteristic dimensions of the structure are collected in Table 4.

Panel lenght	a	m	2.52
Panel width	b	m	2.71
Curvature radius	R	m	2.79
Thickness	t	m	0.02132

Table 4 Physical dimensions of the VTI panel.

The configuration considered in phase one and two considered the structure divided into six panels. A Panel was pinched in 4 points, close to the corner, and it is

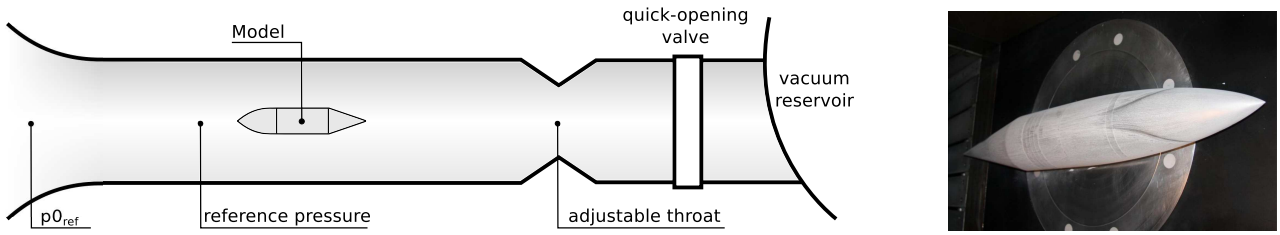

(a) Wind Tunnel configuration (b) 1/2 RM in the WT.

Fig. 4 Wind Tunnel configuration and model setup.

connected (in the longitudinal direction) to the adjacent panels with correspondence to half length of the panel $a/2$.

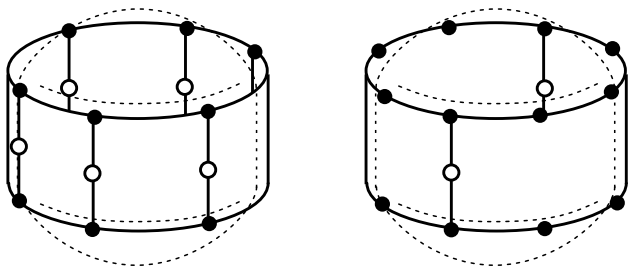

(a) Six Panels Configuration (b) Two Panels Configuration

Fig. 5 Different panel configurations. (•) Pinched Points; (◯) Connection between panels.

In phase three the design was improved and the configurations moved from six to two panels. Each panel has five pinched points on the leading and trailing edge. In Figure 5 both configurations are depicted.

The VTI panels are made of a sandwich material. The lightweight core is covered by two skins built by four layers of composite material each.

3.2 Level 2: Preliminary analysis results

In the phase 2 a preliminary aeroelastic analysis has been carried out by considering only the supersonic range. Many models have been taken into account in order to give a complete overview of the aeroelastic behavior of the VTI-panel and to describe the effects of the geometric parameter and boundary condition. In Figure 6 the different models are depicted. On the $x - axis$ the flight time since launch is reported. The solid line represents stability, the dashed line means instability.

The evolution of the natural frequencies along the whole supersonic range have been considered for each model considered. The instabilities have been detected looking for positive values of damping factor.

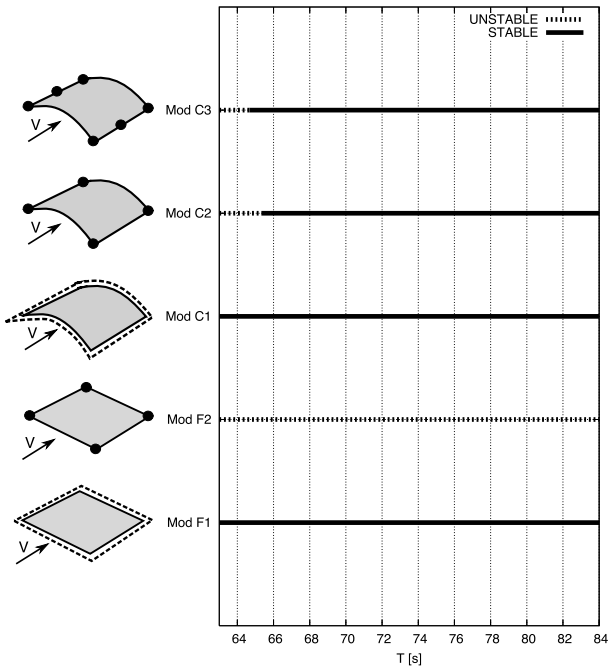

Fig. 6 Stability range summary.(– – – –) Simply supported; (•) Piched.

In Figure 7 the results for the model C2 (curved panel with four pinched corner) are reported. In the first part of the mission profile the second and the third modes are coupled in an aeroelastic instability. This condition lasts up to the second 65.5 when the unstable branch of the damping factor from positive (unstable - ◯) turns tpo negative (stable - •). The coalescence of the frequencies lasts up to second 67.8 when they splint into two different modes.

In Figure 6 the results of all the cases considered are summarized.

The results show that the two model simply supported, Mod.F1 an Mod.C1, are stable along the whole supersonic range (solid line). The Mod.F2 if always unstable (dashed line), but, if the curvature is considered

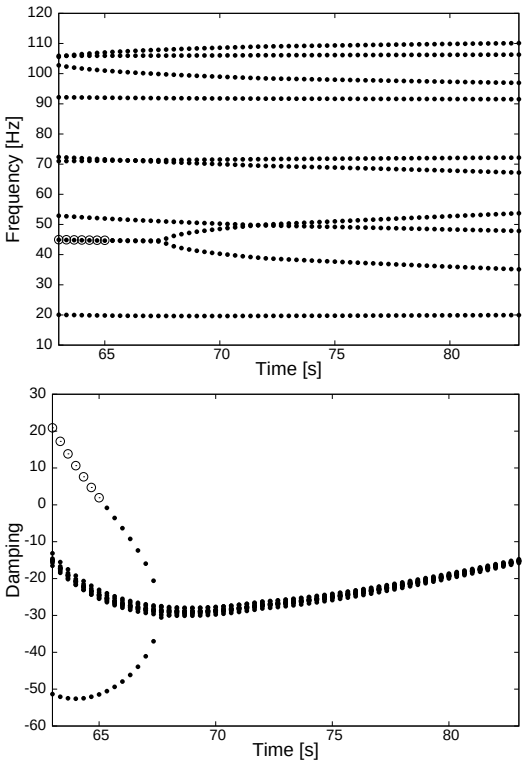

Fig. 7 Time evolution of the natural frequencies and damping factor. Model C2. (•) Stable;(◯) Unstable.

, Mod.C2, it becomes stable in the second part of the supersonic range. In the Mod.C3 two additional constrains have been introduced in order to investigate the effects of connection between the panels. The VTI-panel configuration is the one closer to Mod.C2 because the Mod.C3 is non conservative enough (the connections cannot be considered as rigid constraints).
The results show that the model is critical in the first part of the supersonic regime, so the panel configuration seems not suitable for the mission profile.

3.3 Level 3: WT/CA results correlation

This part of the activity is devoted to the assessment of the computational tool. Because experimental results that deal with the VTI-panel problem were not available it was mandatory to make some WT test in order to investigate the phenomena related to the VTI panel configuration. The CFD model considers an ideal compressible gas, the Shear Stress Transport (SST) $k-\omega$ turbulence model is used. The turbulence intensity was set equal to 1% for all the simulation except those relating to the full scale model were the 5% of turbulence intensity was considered. The boundary conditions reproduce the wind tunnel configuration.

3.3.1 1/2 and 1/8 Rigid Models (RM)

The Rigid Models had the aim to investigate the flow field around the geometry that has to be used in the 1/2 AM and 1/8 AERM.

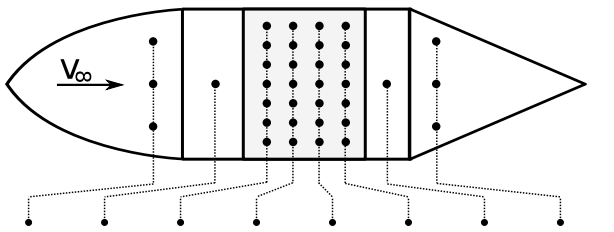

M=0.776							
–	–	-1.13	-1.10	-1.26	-0.99	–	–
-1.30	–	-1.05	-0.93	-0.92	-0.88	–	1.05
–	–	-0.89	-0.91	-0.79	-0.81	–	–
-1.77	-0.82	-0.89	-0.88	-0.81	-0.80	-0.48	0.97
–	–	-0.85	-1.22	-0.83	-0.80	–	–
-1.87	–	-0.96	-0.93	-0.91	-0.83	–	0.88
–	–	-1.07	-1.36	-1.07	-0.97	–	–
M=1.729							
–	–	-3.44	-3.71	-6.07	-7.56	–	–
-5.04	–	-4.32	-5.65	-4.79	-5.87	–	-18.31
–	–	-4.57	-4.92	-4.48	-4.54	–	–
-0.70	-2.44	-3.55	-3.19	-2.65	-2.93	-4.05	-23.38
–	–	-3.24	-4.23	-5.12	-5.26	–	–
-.95	–	-6.01	-7.04	-7.15	-5.86	–	-17.40
–	–	-5.13	-5.41	-7.02	-8.76	–	–

Table 5 1/2 RM, pressure difference (%) between WT test results and CFD model.

In Table 5 the percentage pressure difference between the WT test results and the CFD computational analysis are reported. Different Mach regimes have been investigated. In Table 6 the maximum values of the percentage pressure difference between WT test and CFD have been reported for each model and at each Mach number.

While the percentage pressure difference at M=0.776 and M=1.729 is lower than 10%, at Mach equal to 1.529 there is a difference equal to 20% for both the models. This difference is due to an interaction between the WT facility and the model, a shock wave caused by the leading edge of the model has been reflected by the WT wall creating a flow field distortion in some part of the panel. The computational model does not consider the WT wall so it does not predict such effect. Thus, the discrepancies in the results come from the difference in the experimental and computational model so the results at M=1.529 do not affect the reliability of the test.

M	1/2 RM	1/8 RM
0.776	-1.36%	-1.46%
1.529	-19.29%	-20.08%
1.729	-8.76%	-6.88%

Table 6 Maximum pressure difference (%) between WT test results and CFD model.

As for the results of the 1/2 RM, the results from the 1/8 RM show that the flow field can be considered uniform on the model and the real M number is very close to the reference one. The comparisons with the computational tool show that the CFD analysis is able to predict properly the flow field in the WT and so the fluid model can be considered reliable enough for the aeroelastic computation.

3.3.2 1/2 Active Model (AM)

The 1/2 Active Model (AM) had the aim to assess the Fluid Structure Interaction (FSI) capabilities of the computational tool around the half cylinder configuration. Because of the dimension of the WT facility it was not possible to design a reliable Aeroelastic Model of the 1/2 cylinder.

The geometry is the same used in the 1/2 RM but the panel has been built by a thin skin, the boundary condition are those from the VTI panel (pinched point supported). An actuator has been put in the cavity under the panel in order to create some periodical deformation on the panel during the test.

The goal of the test was to confirm that the unsteady aerodynamic computational model was able to follow the periodical deformations of the panel under the flow.

The results show that there was three different contribution at the pressure oscillation:

- Activation,
- Quasi random excitation due to Boundary Layer (BL),
- Aeroelastic phenomena.

The results are shown in the three points (c:1, c:2 and c:3) reported in Figure 8. The most interesting regime is the regime at M 0.86 (see Figure 9a) where all the three contributions can be detected. The pressure spectra, Figure 9a, show a pressure distribution along the whole spectra due to the random excitation. A pressure peak appears close to the excitation frequency (5912 Hz, 9072 Hz, 10389 Hz). A peak due to a possible aeroelastic phenomena can be seen at about 10 KHz. The same problem at the same regime has been investigated by LKE. For this analysis the random excitation has been imposed as external loads, the load spectra have been provided by VZLU and it was derived by the WT test.

The results from the WT test showed that the model was able to predict some aeroelastic instabilities with a frequency equal to 10KHz. Because of these results it was decided to neglect the activation in the computational activity.

Three different analyses have been performed in order to compare the results:

- CASE1: FSI + Quasi random loads
- CASE2: Only Quasi random loads
- CASE3: Only FSI

The quasi random excitation did not have a big impact on the solution so only the result for the CASE 3 are reported. The results (Figure 9b) show a peak at 9-10KHz, a frequency close to the one see in the WT test.

From the results of the 1/2 AM it is possible to state that the computational tool is able to predict the aeroelastic behaviour observed in the WT test. The CASE 3 result can be compared with the one from the WT test.

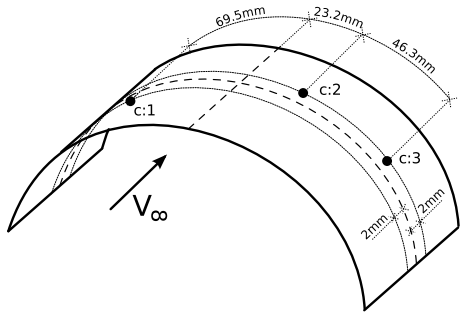

Fig. 8 Pressure sensors (c:1, c:2 and c:3) position on the active panel.

3.3.3 1/8 Aeroelastic Model (AERM)

The scaled model has been designed to show flutter at M=0.8. The wind tunnel results shows that at M=0.78 four modes (3,6,7,14) appear to be amplified by aeroelastic phenomena (see Figure 10).

The same model has been investigated by LKE by using the computational FSI approach. The results obtained by LKE show that the model is stable during the whole Mach range. The divergence between the two results have to be investigated in the computational model used in the analyses. The dimensions of the WT model make it very small and so also very light. The introduction of the accelerometers has a strong influence on the dynamic behaviour of the panel and therefore

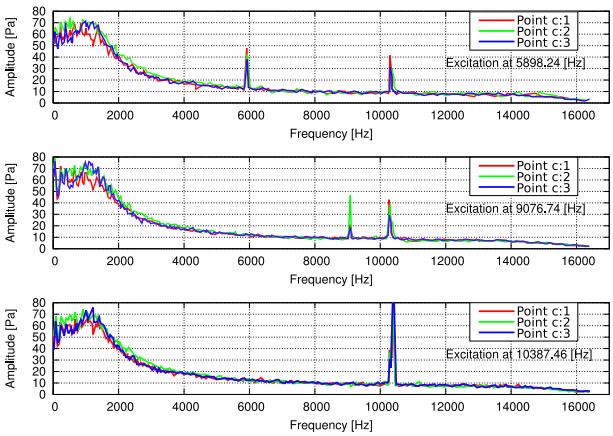

(a) WT results of the 1/2 Active model at M=0.86, Power Spectral Density in three different points.

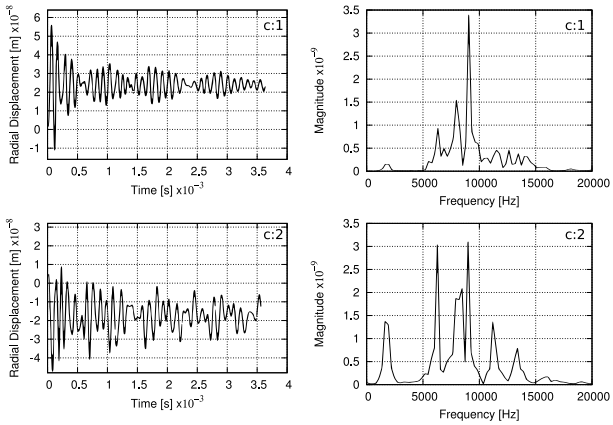

(b) Computational Analysis results of the 1/2 Active model At M=0.86, Case 3. Time response and Power Spectral Density in the point c:1 and c:2

Fig. 9 Response of the 1/2 Active Model at M=0.86.

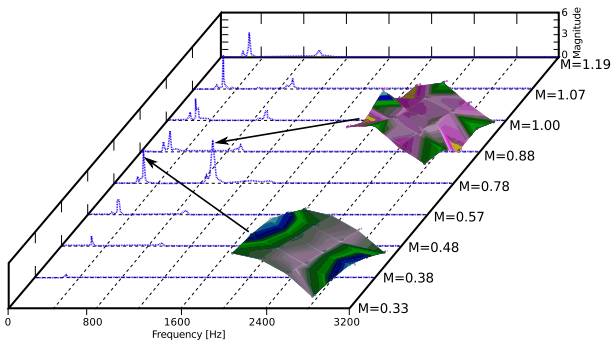

Fig. 10 Power Spectral Density (PSD) of the Aeroelastic model at different Mach regimes.

also on the aeroelastic behaviour. The numerical model implemented by LKE takes into account the accelerometers mass. Many approaches can be used in the computational model to introduce the effects of the accelerometer: concentrated mass, smeared mass, etc. Each one can provide different dynamic behaviour. Since the sensor mass is comparable with the panel mass any small difference in the physical and computational models can affect strongly the results.

	Stability Margin Factor			
	M=0.78	M=0.96	M=1.01	M=1.19
BLM	1.5–2.0	1.0–1.25	1.0–1.25	3.0–4.0
BLM1	–	1.5–2.0	–	–
BLM2	–	0.5–1.0	–	–
BLM3	–	1.0–1.25	–	–
BLM4	–	1.0–1.5	–	–
VTI	–	2.0–2.5	2.0–2.5	–

Table 7 Stability Margin Factor (SMF) at for different Models at different flight conditions.

3.4 Full scale VTI panel analysis

The full scale VTI panel has been investigated by the two different approaches presented in Figure 3.

The approach proposed by LKE is able to include any external load and can be used in all Mach regimes, but the full coupled approach is very time consuming and requires a big computational effort. Because of that only the half cylinder can be analysed imposing the symmetry/asymmetry by means of appropriate boundary conditions.

The approach proposed by VZLU introduces some strong approximations in the fluid domain (the pressure is split in the steady contribution evaluated by means of the CFD tool and a pressure perturbation evaluated by means of the potential linearised theory) and does not allow to introduce easly the external loads, but is less computationally expensive, so the complete structure can be analysed by the VZLU approach.

In order to built a representative computational model, the first part of the activity was devoted to the analysis of the different external load and their effects on the panel dynamics.

The Base Line Model (BLM) has the half cylinder geometry, the VTI boundary conditions. Starting from this model the following effects have been investigated:

- BLM1: Shrinkage and thermal effects,
- BLM2: Modified BC, one pinched point has been removed,
- BLM3: Gap effects, the gap between the panel and the tank has been considers by an acoustical model,
- BLM4: Viscosity,
- VTI : BLM, Gap effects, viscosity, thermal load, shrinkage.

The shrinkage is the initial displacement due to the deformation of the tank where it is attached the panel.

In Table 7 the Stability Margin Factors (SMF) are reported for the different models and for different Mach numbers. The results were obtained using the computational approach proposed by LKE (see Figure 3). The stability margin has been investigated by considering a fixed Mach number and increasing the density (ρ) up to the critical condition (ρ_f). The stability margin factor is the multiplication factor necessary to reach an unstable condition, as reported in equation 5.

$$SMF = \frac{\rho_f}{\rho} \tag{5}$$

The SFM has a high boundary and a low boundary because the stability analyses were performed in a finite number of points so, increasing the density ratio, the low boundary is the last stable point while the high boundary corresponds with the first unstable point.
As an example, the BLM at M=0.78 has an SMF included between 1.5 and 2 that means that in the flight condition, when the launcher is at M=0.78, the density should be almost the double ($\times$ 1.5-2) to make the panel unstable. The BLM appear to be stable for all the Mach values, the SMF is close to one in the transonic regime so, the flight condition are close to the critical condition. The results show that reducing the number of pinched points, the SMF is reduced from 1.0-1.25 to 0.5-1.0. All the other combinations (BLM-1,3,4) have no negative effects on the aeroelastic phenomena. In particular, the VTI model, that include all the external loads, shows an SMF that is the double of the BLM, so to neglect the external load is a conservative assumption.

The final results obtained by LKE and VZLU can be represented in only one graph that collect all the informations about the VTI panel flutter behaviour (see Figure 11). Figure 11 shows the different flutter boundaries obtained with the different approaches. The parameter λ represents the non-dimensional flutter parameter and is defined as:

$$\lambda = \frac{\rho_\infty V_\infty^2 a^2}{D} \tag{6}$$

where, a is the length of the panel and D is the bending stiffness of the panel in the flow direction. The results coming from the LKE analysis have a *lower bound* and a *higher bound*, that is because the SMF is defined as a range, the lower value of SMF gives the *lower bound*, the higher values of SMF gives the *higher bound*.

The boundary obtained by VZLU show that, if the mean Cp distribution is considered equal to 0 in the transonic region, the flutter boundary goes to zero. This is due to the approximation included in the structural (considered linear) and flow model. If the mean Cp distribution is derived by a CFD calculation (EDGE code) the instability boundary increases and becomes comparable to the one evaluated by LKE. The steady Cp distribution acts as a pressure on the panel, so the results are in agreement with those showed in Table 3.

What we can learn from the VZLU results is that:

- The results from the 1/2 cylinder can be considered comparable to those from the full cylinder.
- The transonic region is confirmed as the critical one.
- The mean Cp distribution equal to 0 is a too conservative assumption.

The results from the LKE analysis show that the Base Line Model has the lower flutter boundary very close to the mission profile. If we consider the real VTI panel the lower boundary is increased but not enough to be neglected in the VTI design.

The model considered by VZLU ($Cp \neq 0$) can be compared with the Base Line Model (BLM) by LKE. The results show a good agreement, the approaches used are very different and based on completely different assumptions. Because of what above, the cross-check comparisons increase the confidence in the results obtained and confirm that the instability boundary could be very close to the mission profile.

4 Conclusions

In the present paper the aeroelastic design of a Versatile Thermal Insulation panel has been analysed.

The design approach has been split into three main areas:

- Literature review,
- Preliminary computational analysis (only supersonic range),
- Advanced Computational Analysis supported by Wind Tunnel Tests.

The literature review improved knowledge of panel flutter and was the starting point for the computational activities performed in Levels 2 and 3.

In Level 2 activities an FEM model was developed and coupled with Piston theory in order to provide some preliminary results in supersonic regimes. The results of the VTI-panel analysis show an aeroelastic instability in the first part of the supersonic range (from t=63s up to t=65.5s). These results suggest a redesign process of the VTI-panel in order to avoid critical conditions.

The advanced computational analyses proposed in Level 3 were performed using two different approaches. The first proposed by LKE is based on a time domain simulation, the second proposed by VZLU is based on

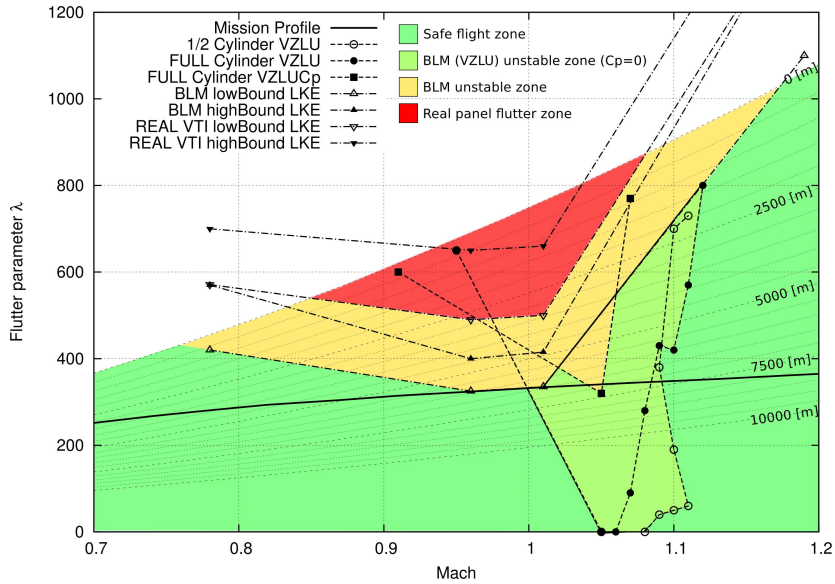

Fig. 11 VTI-panel flutter stability regions for different computational models.

a frequency domain solution. The computational models were assessed by means of WT tests. This full scale model analysis focused on the analysis of the effects of the different external loads (shrinkage, boundary layer, etc); on the stability of the panel and on the investigation of the stability boundary of the VTI panel.

From the results the following considerations can be made:

- The WT tests of the Aeroelastic Model introduce many uncertainties in the results: the dimension of the facilities and the high scaling factor can strongly affect the reliability of the results. However, the results obtained in the WT test were used successfully for the computational tool assessment in many cases.
- The computational tool proposed by LKE is able to predict many of the aeroelastic phenomena investigated. It was successful in the benchmark analysis. It provides a good prediction of the flow field on the Rigid Model. It provide an accurate FSI approach assessed with the 1/2 AM and the 1/8 AERM. Because of this, the tool capabilities deal with the VTI panel problem and the tool can be used in the full scale analysis.
- The full scale model analysis was performed by LKE by using the FEM+CFD approach assessed with the WT tests. The LKE approach considered many effects such as shrinkage and boundary layer and the results show that the panel in its base line configuration has a stability boundary close to the mission profile in the transonic regimens. The instability appears first as divergence of the trailing edge, but in some cases also with an oscillatory behaviour close to the straight edge. The effects included do not cover all the possible configurations and it is not possible to consider the presented results as fully representative of the VTI panel in flight conditions.
- The full scale analysis was performed by VZLU by using the ZAERO+EDGE codes. When the steady Cp distribution is considered different from 0, the results are very similar to the results from LKE. In both cases the stability boundary in the transonic range is close to the mission profile.

The outputs of the present research activity show that the VTI panel can be affected by aeroelastic instability not far from the flight conditions, so the VTI-panel design should consider aeroelastic loads. Moreover, the assessments of the computational tool and the comparisons with the WT tests, provide a more reliable FSI computational tool that can predict flutter on this complex configuration. In conclusion the present work provides a basis for future developments of VTI-panel design and provides a reliable computational approach for the analysis of panel flutter phenomena.

References

Ashley H, Zartarian G (1956) Piston theory - a new aerodynamic tool for the aeroelastician. Composites Structures pp 1109–1118

Carrera E, Giunta G (2010) Refined beam theories based on a unified formulation. International Journal of Applied Mechanics 2(1):117–143

Carrera E, Giunta G, Nali P, Petrolo M (2010) Refined beam elements with arbitrary cross-section geometries. Computers and Structures 88(5-6):283–293, dOI: 10.1016/j.compstruc.2009.11.002

Chen PC (2000) Damping perturbation method for flutter solution: The g-method. AIAA Journal 38(9):1519–1524

Dixon IR, Mei C (1993) Finite element analysis of large-amplitude panel flutter of thin laminates. AIAA Journal 31:701–707

Dowell EH (1970) Panel flutter: A review of the aeroelastic stability of plates and shell. AIAA Journal 8:385–399

Dowell EH (1973) Aerodynamic boundary layer effects on flutter and damping of plates. Journal of Aircraft 8(8):734–73

Fung YCB (1960) A summary of the theories and experiments on panel flutters. Tech. Rep. 8, Guggenheim Aeronautical Laboratory, California Institute of Technology, 734–738

Ganapathi M (1995) Supersonic flutter of laminated curved panels. Defense Science Journal 45:147–159

Gordiner RE, Visbal MR (2002) Development of a three-dimensional viscous aeroelastic solver for nonlinear panel flutter. Journal of Fluids and Structures 16:497–527

Hashimoto A, Aoyama T, Nakamura Y (2009) Effects of turbulent boundary layer on panel flutter. AIAA Journal 47:2785–2791

Johns DJ (1965) A survey on panel flutter. Tech. rep., AGARD

Kariappa B, Komashekar BR, Shah CG (1970) Discrete element approach to flutter of skew panels with in-plane forces under yawed supersonic flow. Journal of Sound and Vibrations 8:2017–2022

Kouchakzadeh MA, Rasekh M, Haddadpoura H (2010) Panel flutter analysis of general laminated composite plates. Composites Structures 92:1906–2915

Lee I, Lee MD, Ho K (1999) Supersonic flutter analysis of stiffened laminates plates subject to thermal load. Journal of Sound and Vibrations 229:49–67

Lightill MJ (1953) Oscillating airfoil at high mach number. Journal of the Aeronautical Science 20:402–406

McNamara JJ, Friedmann PP (2007) Aeroelastic and aerothermoelastic analysis of hypersonic vehicles: Current status and future trends. In: 48th AIAA/ASME/ASCE/AHS/ASC Structures, Structural Dynamics, and Materials Conference, 23 - 26 April 2007,Honolulu, Hawaii

Montabone M, Tosi MC (2011) Cust2-tasi-tsp-01-0004/technical requirement summary for flutter investigations on versatile thermal insulation. Tech. rep., TAS-I

Shiau LC, Lu LT (1992) Nonlinear flutter of two-dimensional simply supported symmetric composite laminated plates. Journal of Aircraft 29:140–145

Van Dyke MD (1952) Study of second-order supersonic flow theory. Tech. rep., NACA

Vedeneev VV (2012) Panel flutter at low supersonic speeds. Journal of Fluids and Structures 29:79–96

Xue DY, Cheung YK (1993) Finite element nonlinear panel flutter with arbitrary temperatures in supersonic flow. AIAA Journal 31:154–162